BLANCO

BLANCO LIVIA-S HD

Safety and hygiene
BLANCO mixer taps

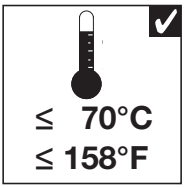

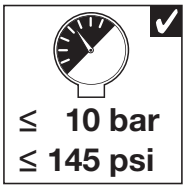

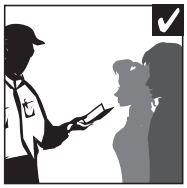

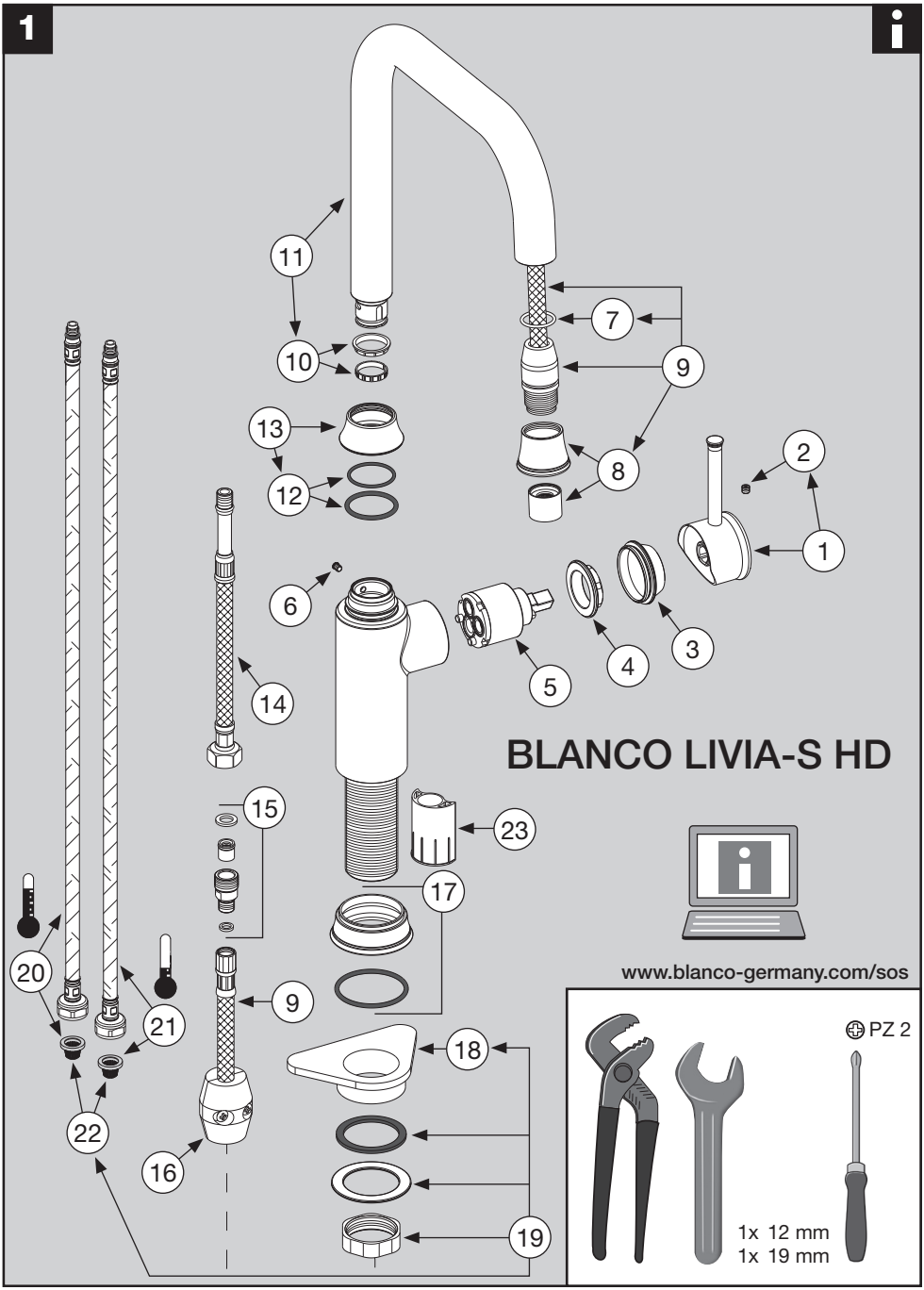
1
11
10
13
12
7
9
8
2
1
6
14
5
4
3
BLANCO LIVIA-S HD
15
23
17
20
21
9
18
22
16
19
www.blanco-germany.com/sos
PZ 2
1x 12 mm
1x 19 mm

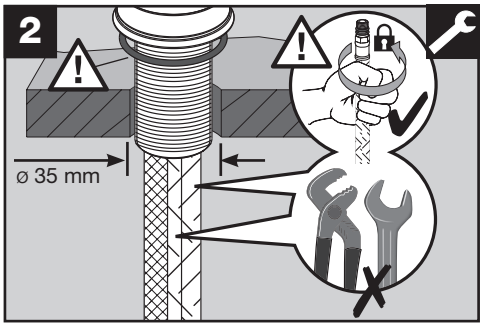
2
ø 35 mm

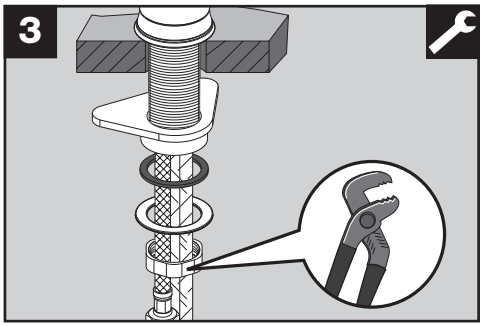
3

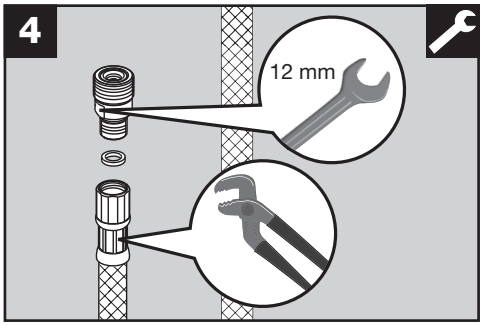
4
12 mm

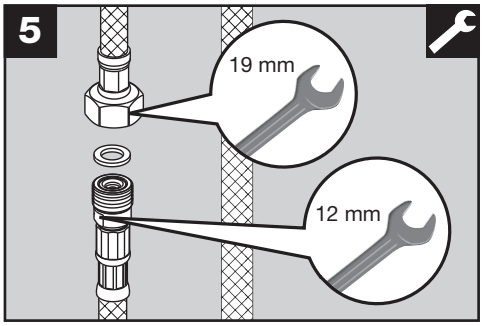
5
19 mm
12 mm

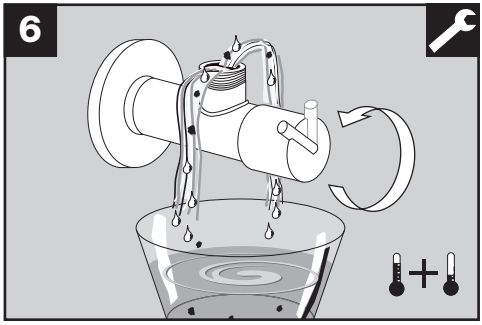
6

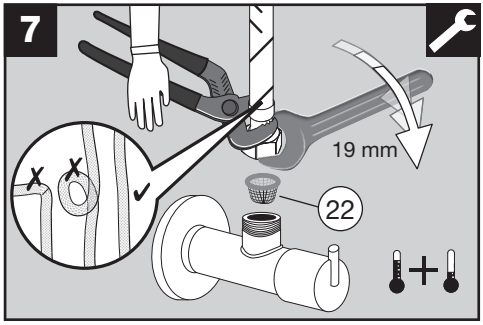
7
19 mm
22

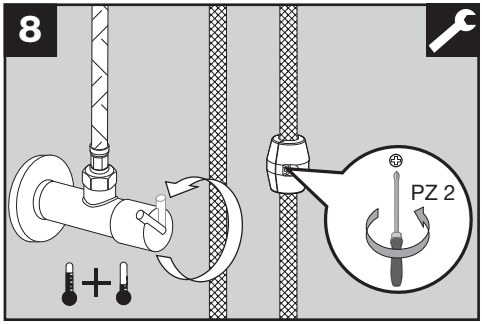
8
PZ 2

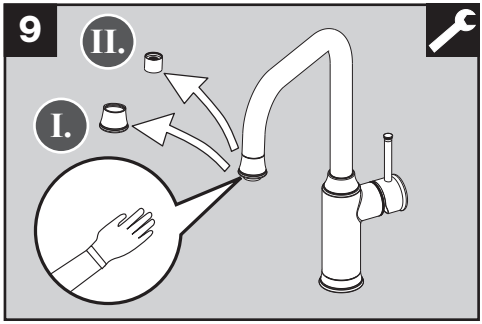
9
II.
I.

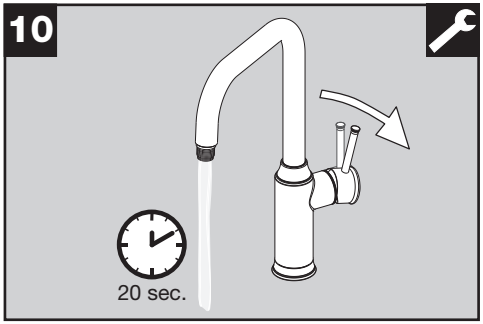
10
20 sec.

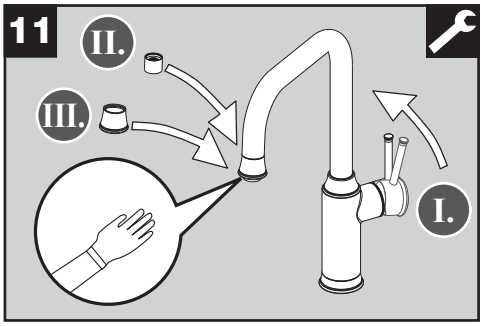
11
II.
III.
I.

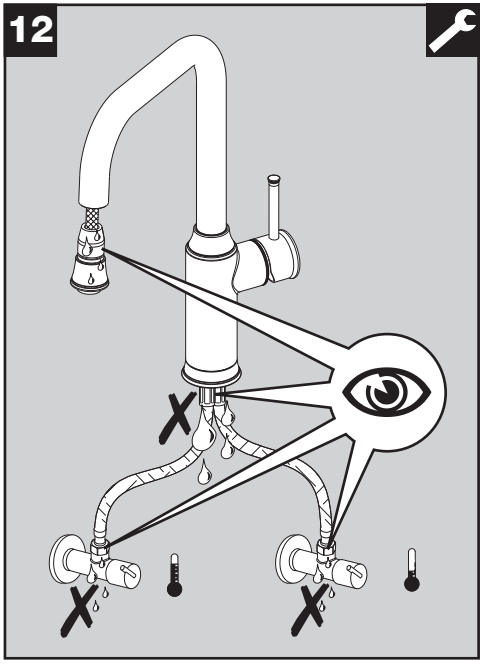
12

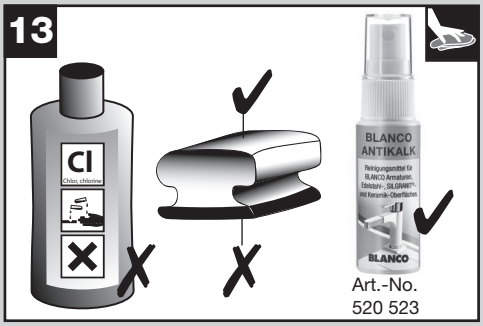
13
Cl
Chlor, chlorine
BLANCO
ANTIKALK
Reinigungsmittel für
BLANCO Armaturen,
Edelstahl-, SILGRANIT®-
und Keramik-Oberflächen
BLANCO
Art.-No.
520 523

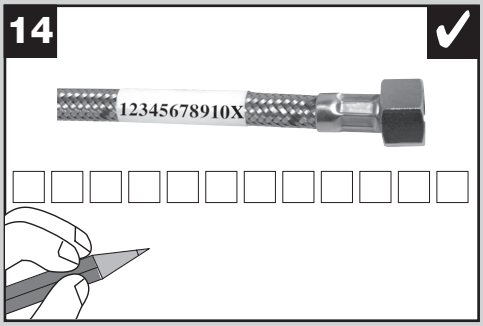
14
12345678910X

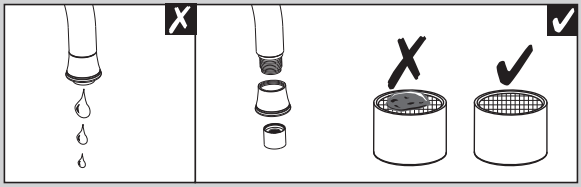

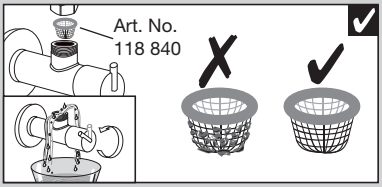
Art. No.
118 840

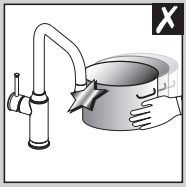

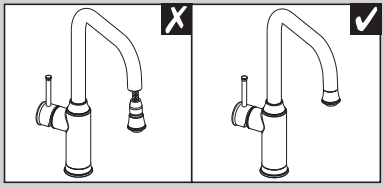

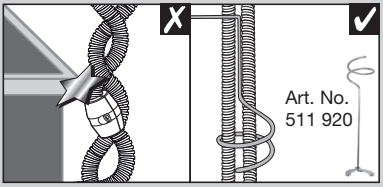
Art. No.
511 920